Data sheet: Stratos PICO-Z 20/1-6

Product data

Maximum operating pressure *PN*	10 bar
Max. fluid temperature *T*	70 °C
Min. fluid temperature *T*	2 °C
Max. ambient temperature *T*	40 °C

Motor data

Protection class motor	IPX4D
Electromagnetic compatibility	EN 61800-3
Power consumption $P_{1\ min}$	3 W
Power consumption $P_{1\ max}$	45 W
Emitted interference	EN 61000-6-3
Interference resistance	EN 61000-6-2
Insulation class	F
Mains connection	1~230 V, 50/60 Hz
Rated power P_2	0.03 kW
Min. speed n_{min}	800 rpm
Max. speed n_{max}	4200 rpm
Rated current I_N	0.44 A
Motor protection	Not required (blocking-current proof)

Operating data

Max. fluid temperature *T*	70 °C
Min. fluid temperature *T*	2 °C
Maximum operating pressure *p*	10 bar

Installation dimensions

Pipe connection on the suction side	G 1¼
Pipe connection on the pressure side	G 1¼
Port-to-port length *l0*	150 mm

Materials

Shaft	1.4122, X39CrMo17-1
Pump housing	1.4409, GX2CrNiMo19-11-2
Impeller	PPE-GF30
Bearing	Total carbon

Information for order placements

Brand	Wilo
Product description	Stratos PICO-Z 20/1-6
Article number	4216471
Net weight, approx. *m*	2 kg

Dimensions and dimensions drawings: Stratos PICO-Z 20/1-6

4216471_ConGraph_stratos_pico_z_20_150__dim_01_1405

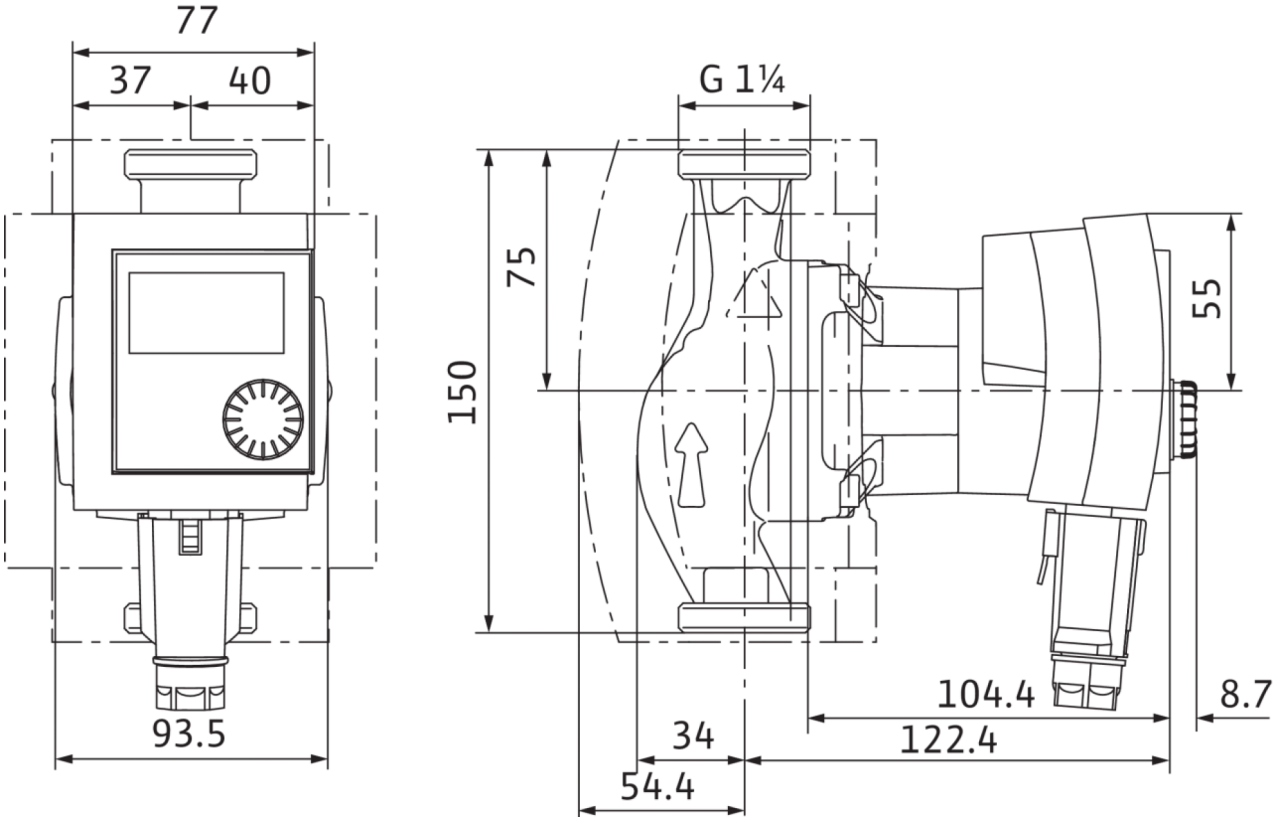

Pump curves: Stratos PICO-Z 20/1-6

Stratos PICO-Z 20/1-6, 25/1-6

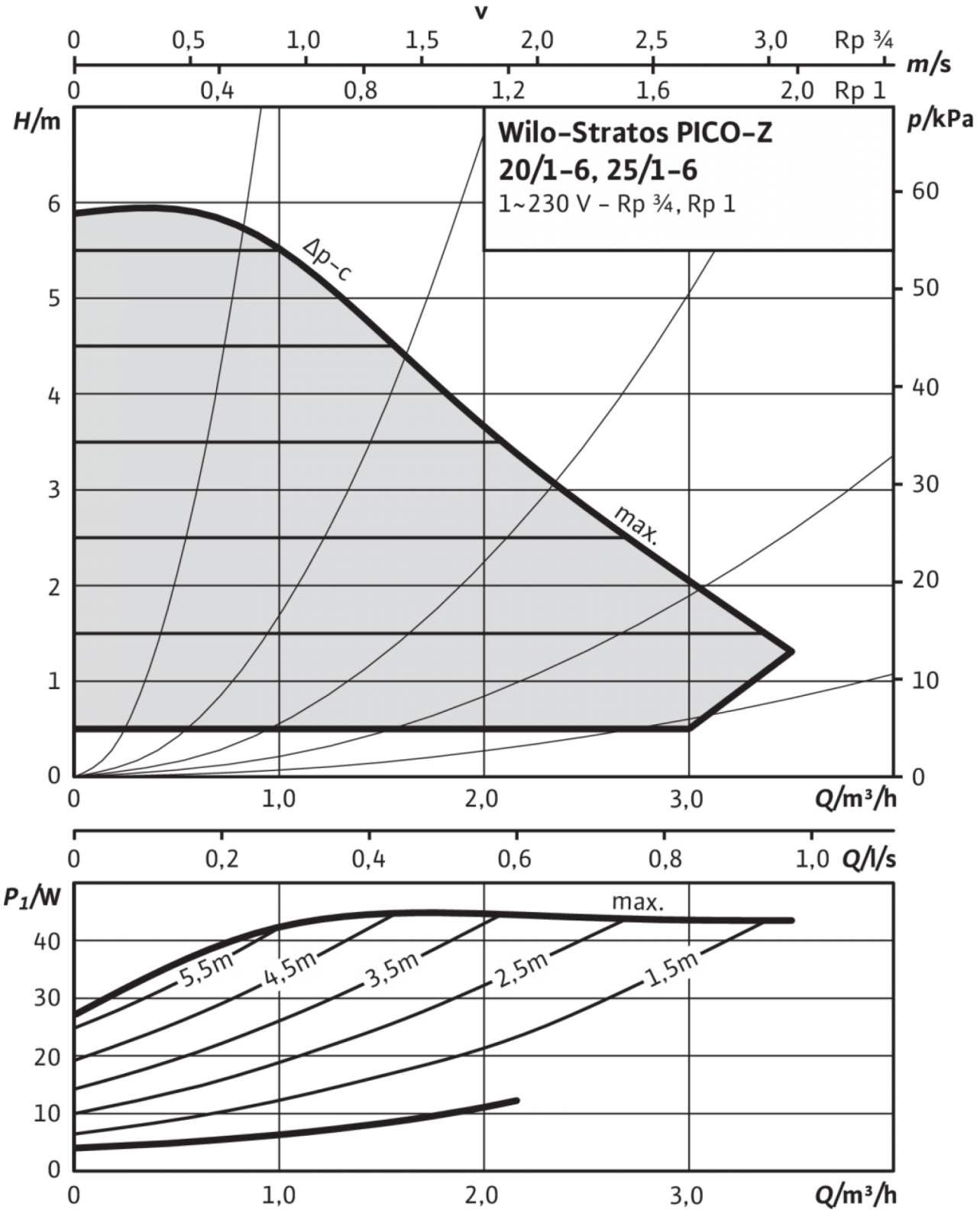

Stratos PICO-Z 20/1-6, 25/1-6

Pump curves: Stratos PICO-Z 20/1-6

Stratos PICO-Z 20/1-6, 25/1-6

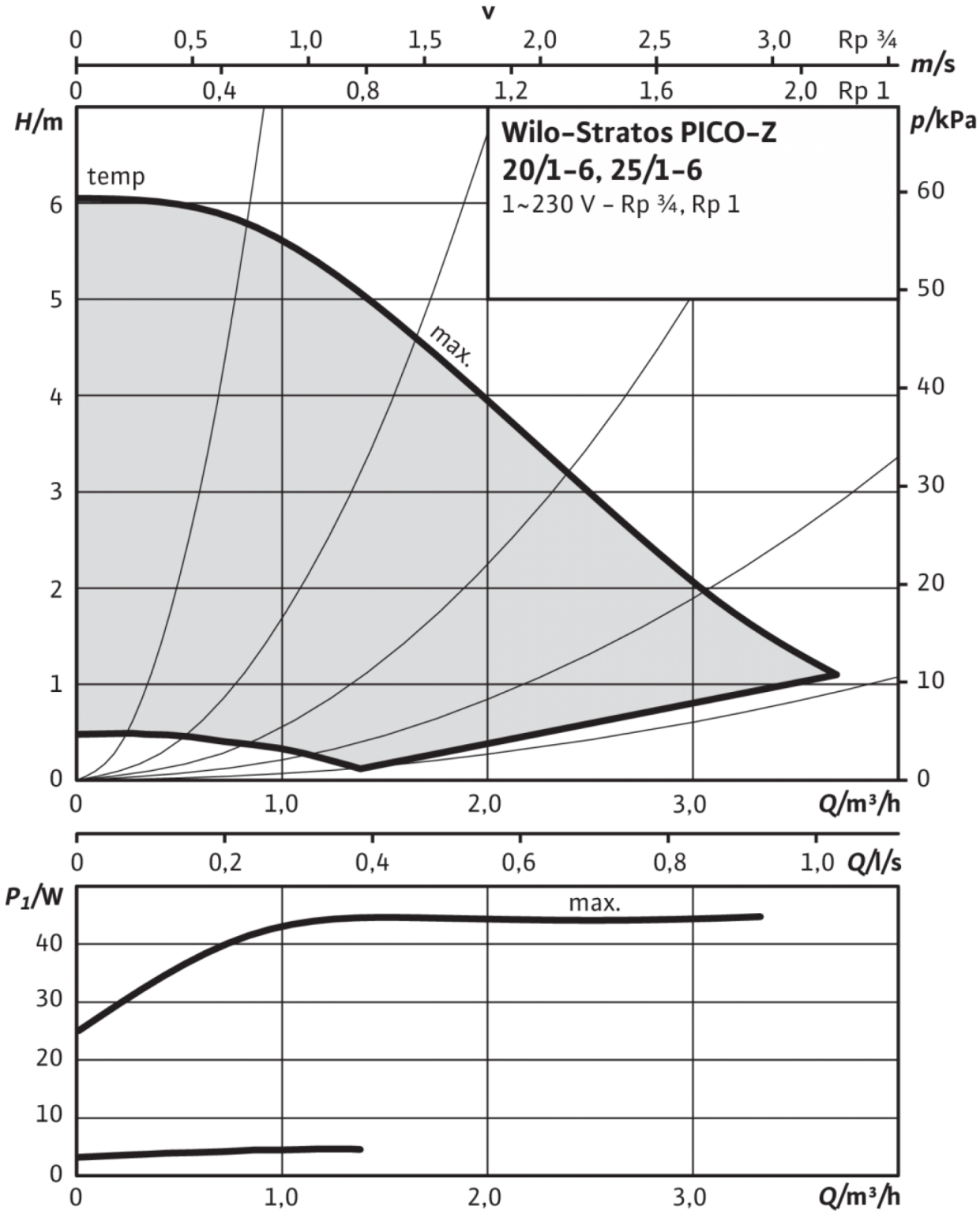

Wiring diagram: Stratos PICO-Z 20/1-6

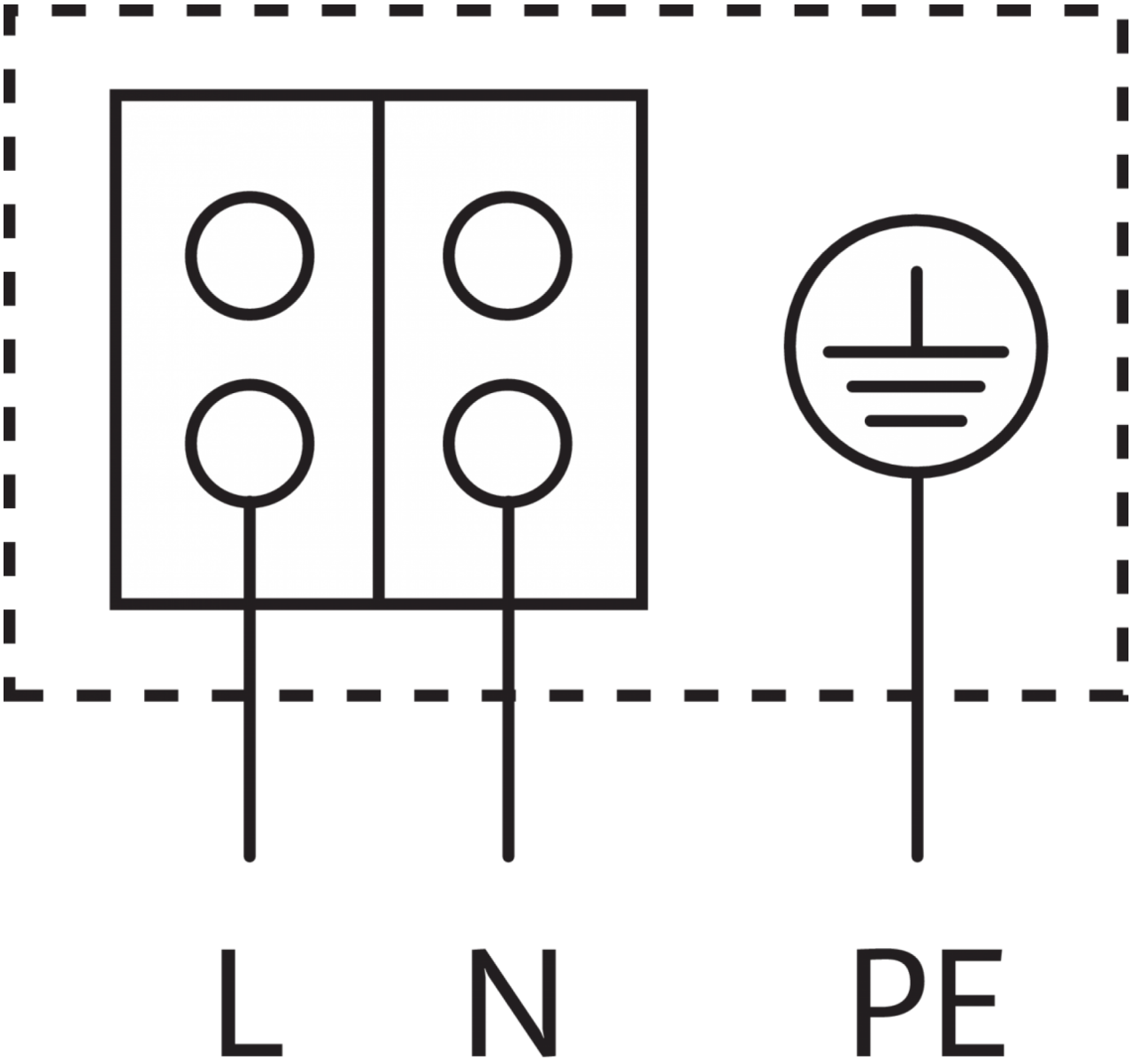

Blocking current-proof motor

Single-phase motor (EM) 2-pole - 1~230 V, 50 Hz

Tender text: Stratos PICO-Z 20/1-6

This circulation pump is suitable only for drinking water.

Maintenance-free domestic hot water glandless circulation pump with threaded connection, blocking-current proof synchronous motor according to ECM technology and built-in electronic power control for variable differential pressure control. With maximum efficiencies and high starting torque, including automatic deblocking function. Can be used for all domestic hot water applications (+2 up to +70 °C).

Standard-equipped with:

- **Preselectable control modes for optimum manual operating mode, Δp-c (differential pressure constant)**
- **Temperature-controlled operating mode**
- **Identification of the thermal disinfection of the domestic hot water tank**
- **Integrated motor protection**
- **Operating and fault display (with error codes)**
- **Display of the current consumption in watts and the cumulative kilowatt hours, or**
- **Display of effective flow and temperature**
- **Reset function for resetting the electricity meter or for resetting the settings to the factory settings**
- **"Hold" function (key lock) for disabling the settings**
- **Minimal consumption only 3 W**
- **Automatic deblocking function**
- **Equipped as standard with a thermal insulation shell**

Materials	
Shaft	1.4122, X39CrMo17-1
Pump housing	1.4409, GX2CrNiMo19-11-2
Impeller	PPE-GF30
Bearing	Total carbon

Operating data	
Fluid media	Water
Min. fluid temperature *T*	2 °C
Max. fluid temperature *T*	70 °C
Maximum operating pressure *p*	10 bar
Max. permitted total hardness in domestic hot water circulation systems	3.57 mmol/l (20 °dH)

Motor data	
Emitted interference	EN 61000-6-3
Interference resistance	EN 61000-6-2
Mains connection	1~230 V, 50/60 Hz
Power consumption $P_{1\ max}$	45 W
Max. speed n_{max}	4200 rpm
Rated current I_N	0.44 A
Protection class motor	IPX4D

Installation dimensions	
Pipe connection on the suction side	G 1¼
Port-to-port length *l0*	150 mm

Information for order placements	
Net weight, approx. *m*	2 kg
Brand	Wilo
Product description	Stratos PICO-Z 20/1-6
Article number	4216471